TELESCOPIC CYLINDER BALL BALL
2-3 EXTENSIONS

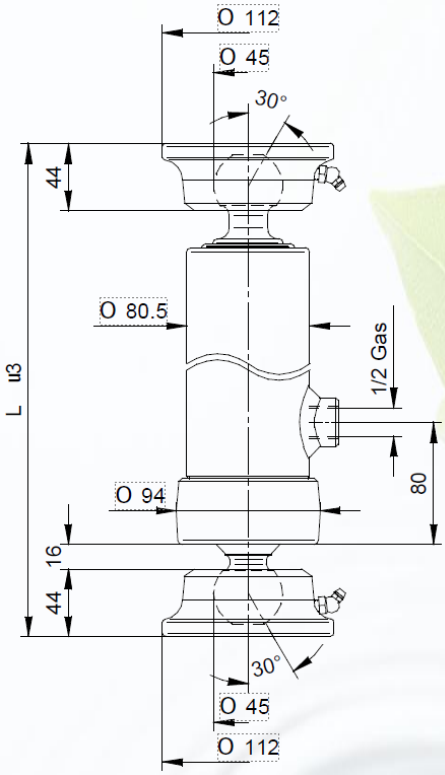

DESCRIPTION

- Type: Telescopic tipping cylinder
- Number of stages: 2-3
- Working pressure: 180 bar
- Lifting capacity: 3,5 Ton., 5,5 Ton., 5 Ton., 7,5 Ton., 11 Ton. & 16,5 Ton.
- Recommended safety valve setting: 200 bar
- Rod protection: Tenifer-treated
- Surface hardness: Min. 570 HV
- Compound layer thickness: Approx. 0.25–0.30 mm
- Hydraulic fluid: Mineral hydraulic oil
- Recommended oil viscosity:
    - ISO VG 22: -18 °C to +5 °C
    - ISO VG 32: 0 °C to +25 °C
    - ISO VG 68: -10 °C to +38 °C
- Minimum free clearance when lowered: 20 mm
- Installation requirement: Install on a solid and level surface
- Safety: Do not exceed maximum working pressure or rated load
- Load condition: Load must be evenly distributed
- Cleaning: Do not clean the cylinder directly with a high-pressure jet

© TAON Hydraulic will always help you find the best solution.

TELESCOPIC CYLINDER BALL BALL
With 2 Extensions

SPECIFICATIONS

PESO TOT. RIBALTABILE 3,5 Ton. a 180 Bar ***TOTAL WEIGHT TIP-UP 3,5 Ton. 180 Bar***
POIDS TOT. BASCULABLE 3,5 Ton. à 180 Bar ***GESAMTGEWICHT ÄNHANGER 3,5 Ton. 180 Bar***

TIPO TYPE TYPE TYP	DISEGNO – DRAWING DESSIN – ZEICHNUNG	CORSA – STROKE COURSE – HUB	Ø SFILATE mm / Ø EXPANSIONS mm / Ø EXTENSIONS mm / Ø STUFEN mm					L¹	L.sfilata – L. extension L.expansion – L. stufen	Peso – Kg – Weight	Poids - Kg – Gewicht	Volume olio Lt. Amount of oil Lt. Volume huile Lt. Ölinhalt Lt.
			46 TON. 2,9	61 TON. 5,2	76 TON. 8,1	91 TON. 11,7	107 TON. 16,1			F	S	
2720	12170	**455**	●	●				440	300	-	16,9	1,1
2721	12171	**525**	●	●				475	335	-	17,4	1,3
2722	12172	**595**	●	●				510	370	-	18,4	1,5
2723	12173	**695**	●	●				560	420	-	20,4	1,7
2724	12174	**795**	●	●				610	470	-	21,9	2
2725	12175	**895**	●	●				660	520	-	23,9	2,2
2726	12176	**995**	●	●				710	570	-	25,9	2,4

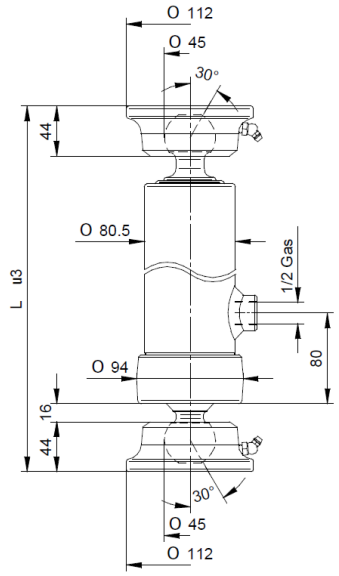

PESO TOT. RIBALTABILE 5,5 Ton. a 180 Bar ***TOTAL WEIGHT TIP-UP 5,5 Ton. 180 Bar***
POIDS TOT. BASCULABLE 5,5 Ton. à 180 Bar ***GESAMTGEWICHT ANHÄNGER 5,5 Ton. 180 Bar***

TIPO TYPE TYPE TYP	DISEGNO – DRAWING DESSIN – ZEICHNUNG	CORSA – STROKE COURSE – HUB	Ø SFILATE mm / Ø EXPANSIONS mm / Ø EXTENSIONS mm / Ø STUFEN mm					L¹	L.sfilata – L. extension L.expansion – L. stufen	Peso – Kg – Weight	Poids - Kg – Gewicht	Volume olio Lt. Amount of oil Lt. Volume huile Lt. Ölinhalt Lt.
			46 TON. 2,9	61 TON. 5,2	76 TON. 8,1	91 TON. 11,7	107 TON. 16,1			F	S	
3721	12195	**495**		●	●			486	320	-	22	2
3722	12196	**595**		●	●			536	370	-	24	2,3
3723	12197	**695**		●	●			586	420	-	27	2,7
3724	12198	**795**		●	●			636	470	-	30	3
3725	12199	**895**		●	●			686	520	-	32	3,5
3726	12200	**995**		●	●			736	570	-	34	3,8

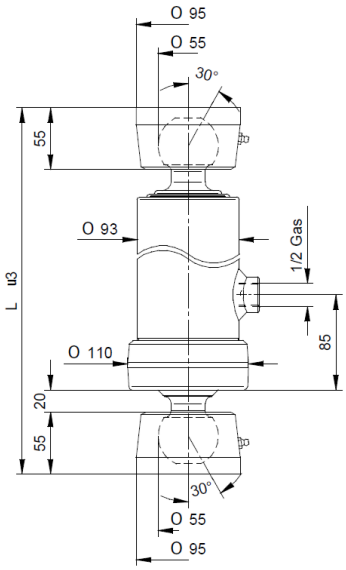

TELESCOPIC CYLINDER BALL BALL
With 3 Extensions

SPECIFICATIONS

PESO TOT. RIBALTABILE 5 Ton. a 180 Bar ***TOTAL WEIGHT TIP-UP 5 Ton. 180 Bar***
POIDS TOT. BASCULABLE 5 Ton. à 180 Bar ***GESAMTGEWICHT ÄNHANGER 5 Ton. 180 Bar***

TIPO TYPE TYPE TYP	DISEGNO – DRAWING DESSIN – ZEICHNUNG	CORSA – STROKE COURSE – HUB	Ø SFILATE mm Ø EXPANSIONS mm Ø EXTENSIONS mm Ø STUFEN mm						L. sfilata – L. extension L.expansion – L. stufen	Peso – Kg – Weight	Poids - Kg – Gewicht	Volume olio Lt. Amount of oil Lt. Volume huile Lt. Ölinhalt Lt.
			46 TON. 2,9	61 TON. 5,2	76 TON. 8,1	91 TON. 11,7	107 TON. 16,1	L¹		F	S	
2731	12181	**500**	●	●	●			385	240	-	17	1,6
2732	12182	**593**	●	●	●			415	270	-	18	2
2733	12183	**683**	●	●	●			445	300	-	19,5	2,2
2734	12184	**790**	●	●	●			480	335	-	21	2,5
2735	12185	**893**	●	●	●			515	370	-	22,5	2,8
2736	12186	**1043**	●	●	●			565	420	-	24,5	3,3
2737	12187	**1283**	●	●	●			645	500	-	28	4
2738	12188	**1490**	●	●	●			715	570	-	31,5	4,7

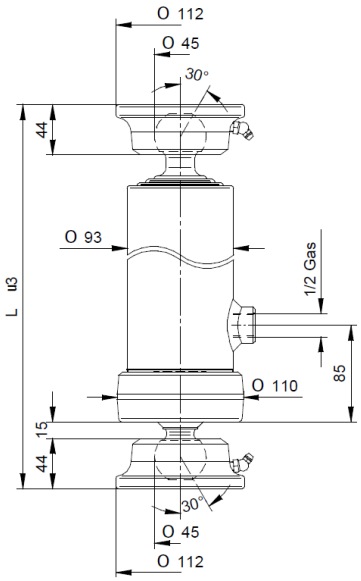

PESO TOT. RIBALTABILE 7,5 Ton. a 180 Bar ***TOTAL WEIGHT TIP-UP 7,5 Ton. 180 Bar***
POIDS TOT. BASCULABLE 7,5 Ton. à 180 Bar ***GESAMTGEWICHT ANHÄNGER 7,5 Ton. 180 Bar***

TIPO TYPE TYPE TYP	DISEGNO – DRAWING DESSIN – ZEICHNUNG	CORSA – STROKE COURSE – HUB	Ø SFILATE mm Ø EXPANSIONS mm Ø EXTENSIONS mm Ø STUFEN mm						L. sfilata – L. extension L.expansion – L. stufen	Peso – Kg – Weight	Poids - Kg – Gewicht	Volume olio Lt. Amount of oil Lt. Volume huile Lt. Ölinhalt Lt.
			46 TON. 2,9	61 TON. 5,2	76 TON. 8,1	91 TON. 11,7	107 TON. 16,1	L¹		F	S	
3730	12204	**500**		●	●	●		407	240	-	24	2,5
3731	12205	**593**		●	●	●		437	270	-	26	2,8
3732	12206	**683**		●	●	●		467	300	-	28	3,3
3733	12207	**785**		●	●	●		502	335	-	30	3,8
3734	12208	**893**		●	●	●		537	370	-	33	4,2
3735	12209	**1043**		●	●	●		587	420	-	37	5
3736	12210	**1283**		●	●	●		667	500	-	42	6
3737	12211	**1493**		●	●	●		737	570	-	46	7

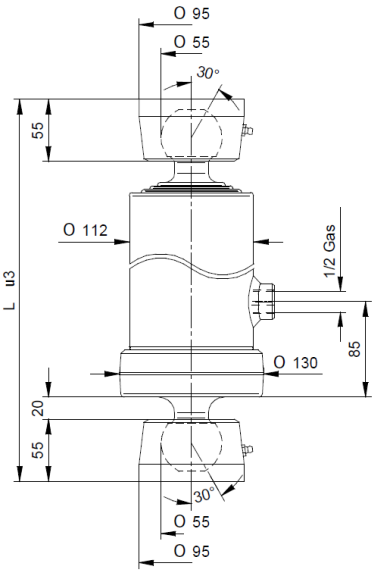

TELESCOPIC CYLINDER BALL BALL
With 3 Extensions

SPECIFICATIONS

PESO TOT. RIBALTABILE 11 Ton. a 180 Bar — ***TOTAL WEIGHT TIP-UP 11 Ton. 180 Bar***

POIDS TOT. BASCULABLE 11 Ton. à 180 Bar — ***GESAMTGEWICHT ÄNHANGER 11 Ton. 180 Bar***

TIPO TYPE TYPE TYP	DISEGNO – DRAWING DESSIN – ZEICHNUNG	CORSA – STROKE COURSE – HUB	Ø SFILATE mm / Ø EXPANSIONS mm / Ø EXTENSIONS mm / Ø STUFEN mm						L. sfilata – L. extension L.expansion – L. stufen	Peso – Kg – Weight	Poids - Kg – Gewicht	Volume olio Lt. Amount of oil Lt. Volume huile Lt. Ölinhalt Lt.
			68 TON. 6,5	88 TON. 10,9	107 TON. 16,1	126 TON. 22,4	145 TON. 19,7	L¹		F	S	
4731	12290	**743**	●	●	●			495	320	-	37	4,7
4732	12291	**785**	●	●	●			510	335	-	38	5
4733	12292	**893**	●	●	●			545	370	-	40	5,7
4734	12293	**1043**	●	●	●			595	420	-	44	6,6
4735	12294	**1283**	●	●	●			675	500	-	51	8,2
4737	12296	**1493**	●	●	●			745	570	-	57	9,4
4730	12289	**2093**	●	●	●			975	800	-	73	13

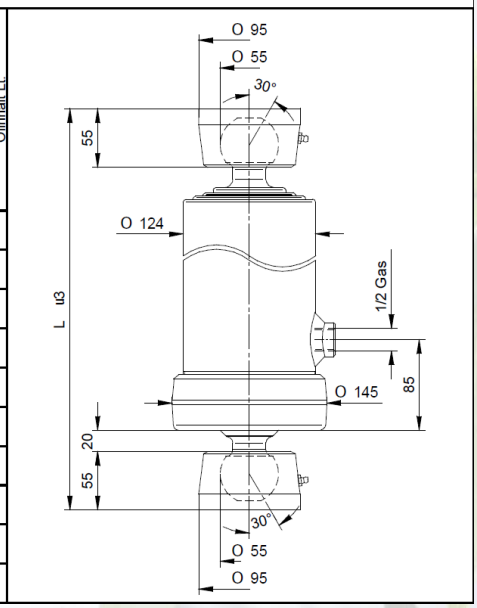

PESO TOT. RIBALTABILE 16,5 Ton. a 180 Bar — ***TOTAL WEIGHT TIP-UP 16,5 Ton. 180 Bar***

POIDS TOT. BASCULABLE 16,5 Ton. à 180 Bar — ***GESAMTGEWICHT ANHÄNGER 16,5 Ton. 180 Bar***
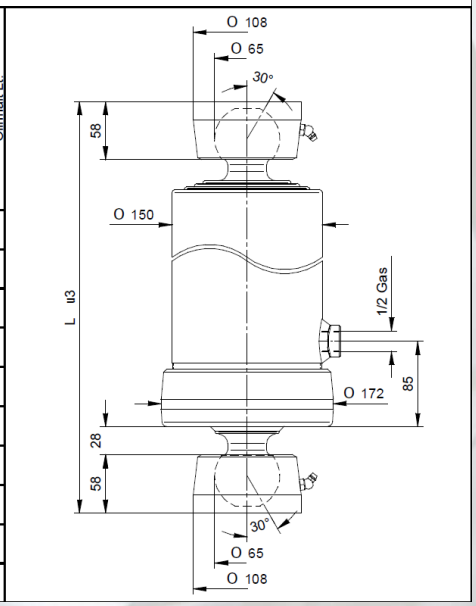
TIPO TYPE TYPE TYP	DISEGNO – DRAWING DESSIN – ZEICHNUNG	CORSA – STROKE COURSE – HUB	Ø SFILATE mm / Ø EXPANSIONS mm / Ø EXTENSIONS mm / Ø STUFEN mm						L. sfilata – L. extension L.expansion – L. stufen	Peso – Kg – Weight	Poids - Kg – Gewicht	Volume olio Lt. Amount of oil Lt. Volume huile Lt. Ölinhalt Lt.
			68 TON. 6,5	88 TON. 10,9	107 TON. 16,1	126 TON. 22,4	145 TON. 19,7	L¹		F	S	
4736	12295	**1273**		●	●	●		692	500	-	59	12
4738	12297	**1483**		●	●	●		762	570	-	65	13,8
4739	12298	**2093**		●	●	●		992	800	-	85	20